TSLC
THE SMART LIGHTING COMPANY

Date: .....
Type: .....
Project: .....
Firm: .....

HB3024IF

INTERIOR LINEAR LED LIGHTBAR

POWERFUL | COMPACT | LOW PROFILE
4.5w/ft | 458lm/ft

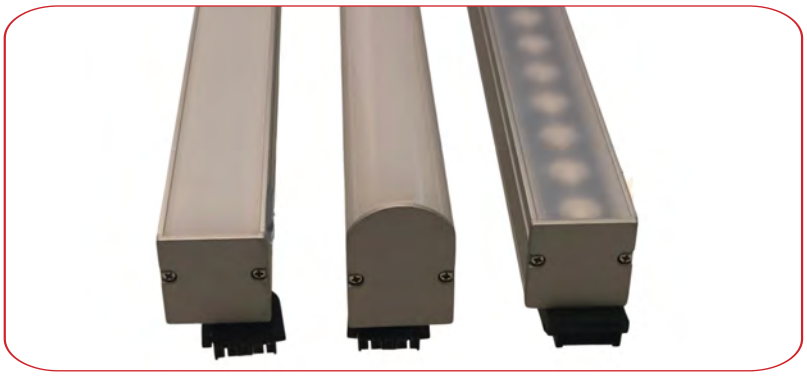

HB30i Series

Direct View | Cove | Accent Lighting

The Smart Lighting Company HB3024if Series, delivers premium architectural lighting without the premium cost. This high-performance, LED linear luminaire delivers specification-grade illumination from a low-profile form factor, ideal for enhancing coves and accents with a consistent, uniform glow. The series offers a flat opaque lens designed for an even distribution of light. Versatility is key, with a universal 100/277VAC integral driver, a selection of four lengths, and a wide range of color temperatures. Nichia bin-sorted LEDs provide the high-quality, even lighting that professionals demand, all while ensuring cost-efficiency. Designed to fit even the most challenging narrow spaces, the HB3024if doesn't compromise on performance or affordability. With multiple fixture lengths, mounting options, and finishes available, and a user-friendly Plug and Play system, installation is streamlined and adaptable. With options for bottom or side wire feed, the HB3024if Series stands as the smart choice for reliable, direct view and general lighting.

1731 Kaiser Ave. Irvine, CA 92614 | sales@thesmartlightingcompany.com | 949.346.3456 | thesmartlightingcompany.com
© 2021 The Smart Lighting Company. All rights reserved. Specifications subject to change without notice. Rev. 2/23

HB3024IF INTERIOR LINEAR LED LIGHTBAR

SPECIFICATIONS

TSLC
THE SMART LIGHTING COMPANY

PERFORMANCE

Output
4.5w/ft - 458lm/ft

Color Temperatures
22k, 25k, 27k, 30k, 35k, 41k, 50k, 65k, R, G, B, A

Beam Angles
120°

LEDs per Foot
24

LED's
Nichia bin-sorted

Color Consistency
2 SCDM

CRI
85 standard, 95 optional

ELECTRICAL

Input Voltage
100-277vac

Power Supply
Integral

Control
0-10v dimming

Heat dissipation
Full thermal management system

Connection
Quick connect plug and play system
(power and signal in one cable)

Projected Lumen Maintenance
>90,000 hours

PHYSICAL

Fixture Length Options
1', 2', 3' 4'

Max Run Length
4.5w - 251ft@277vac, 109ft@120vac

Housing
Anodized extruded aluminum, tooled end caps

Lens
Polycarbonate

Fixture Finish (Standard)
Anodized aluminum

Powder Coated Finish (Optional)
Black, Bronze, White, CU

Standard Mounting
Stainless adjustable or flat brackets

Operating Temperature
-40°F to 122°F, (-40°C to 50°C)

ENVIRONMENT AND WARRANTY

IP Rating
IP40

Environment
Dry locations

Certifications
UL, cUL

Warranty
5 year limited warranty

1731 Kaiser Ave. Irvine, CA 92614 | sales@thesmartlightingcompany.com | 949.346.3456 | thesmartlightingcompany.com
© 2021 The Smart Lighting Company. All rights reserved. Specifications subject to change without notice. Rev. 2/23

technology by LEDpower

HB3024IF INTERIOR LINEAR LED LIGHTBAR

SPECIFICATIONS

THE SMART LIGHTING COMPANY

OPTICS

120°x 120°

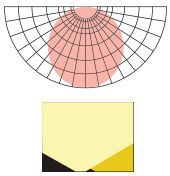

COLOR TEMPERATURES

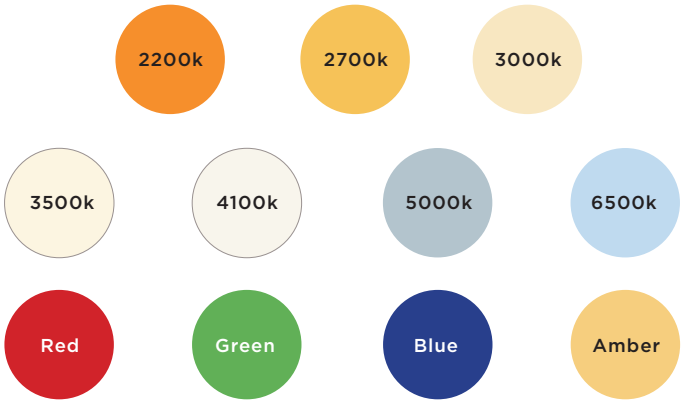

DIMENSIONS AND DATA

	Voltage	View Angle	Watts/ Fixture	Lumens/ Fixture	LEDs/ Fixture	Extrusion Length	Total Length
HB3024IF-1-XXK-XXD-ACD	100-277VAC	120°	4.4w	458	24	L=305.9mm	L=306.8mm (12.1")
HB3024IF-2-XXK-XXD-ACD			8.8w	916	48	L=606.8mm	L=611.8mm (24.1")
HB3024IF-3-XXK-XXD-ACD			13.2w	1352	72	L=911.4mm	L=916.4mm (36.1")
HB3024IF-4-XXK-XXD-ACD			17.6w	1747	96	L=1216.2mm	L=1221.2mm (48.1")

PROFILES

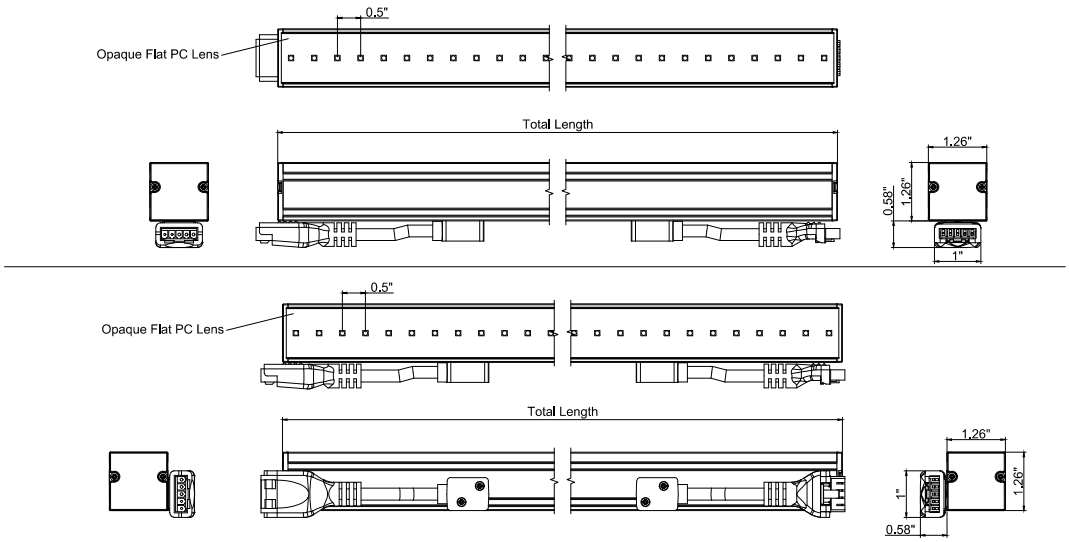

1731 Kaiser Ave. Irvine, CA 92614 | sales@thesmartlightingcompany.com | 949.346.3456 | thesmartlightingcompany.com
© 2021 The Smart Lighting Company. All rights reserved. Specifications subject to change without notice. Rev. 2/23

technology by LEDpower™

THE SMART LIGHTING COMPANY

HB3024IF INTERIOR LINEAR LED LIGHTBAR

ORDER FORM

Date: .....
Type: .....
Project: .....
Firm: .....

CREATE YOUR FIXTURE

Ex. HB3024IF-4-30K-120-ACD

MODEL

HB3024IF

LENGTH

1'	12 inches
2'	24 inches
3'	36 inches
4'	48 inches

COLOR

22k	2200k	65k	6500k
25k	2500k	R	Red
27k	2700k	G	Green
30k	3000k	B	Blue
35k	3500k	A	Amber
41k	4100k		
50k	5000k		

OPTICS

120	120°x120°

VOLTAGE

AC	100-277vac

CONTROL

D	0-10v Dimming
ND	Non Dimming

SELECT CONNECTION

Wire Lead

QTY	POWER/SIGNAL	
	AL-ID5P-72"-W/L	72" (6ft) Wire lead 5pin
	AL-ID5P-xx"-W/L	xx" (CU) Wire lead 5pin
QTY	**POWER**	
	AL-ID3P-72"-W/L	72" (6ft) Wire lead 3pin
	AL-ID3P-xx"-W/L	xx" (CU) Wire lead 3pin

** 1 wire lead required for each run.*

End Cap

QTY		
	AL-ID3P-ENDCAP	End cap for fixture output at end of run

** 1 End cap required at the end of each run*

Jumper Cable

QTY	POWER/SIGNAL	
	AL-ID5P-12"-J	12" (1ft) jumper 5pin
	AL-ID5P-72"-J	72" (6ft) jumper 5pin
	AL-ID5P-xx"-J	xx" (CU) jumper 5pin
QTY	**POWER**	
	AL-ID3P-12"-J	12" (1ft) jumper 3pin
	AL-ID3P-72"-J	72" (6ft) jumper 3pin
	AL-ID3P-xx"-J	xx" (CU) jumper 3pin

** Fixtures are end to end connected. Use jumpers if space is needed between fixtures.*

SELECT MOUNTING

QTY	MOUNTING BRACKETS - 2 PER FIXTURE	
	AL-ID30-ADJ BRACKET	HB30i Adjustable bracket
	AL-ID30-FLAT BRACKET	HB30i Flat bracket bottom wire feed
	AL-ID30-FSF BRACKET	HB30i Flat bracket side wire feed

ADDITIONAL OPTIONS

Optional Powder Coated Finish

QTY	Powder coated finishes available for additional cost	
	BK	Black
	BZ	Bronze
	WH	White
	CU	Custom

** Fixture housing is anodized aluminum standard*

0-10V Dimmer

QTY		
	LUT-DVSTV-WH	0-10v dimming wall switch

Surge Protection

QTY		
	LSP4-UNV	120/277v surge protector

1731 Kaiser Ave. Irvine, CA 92614 | sales@thesmartlightingcompany.com | 949.346.3456 | thesmartlightingcompany.com
© 2021 The Smart Lighting Company. All rights reserved. Specifications subject to change without notice. Rev. 2/23

HB30 SERIES

WIRING OPTIONS

THE SMART LIGHTING COMPANY

WIRE LEAD

DESCRIPTION
5 pin power / signal wire

PART NUMBER
AL-ID5P-xx”-W/L

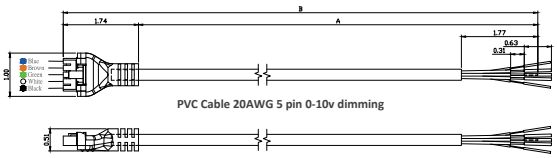

Wire color	Description
Black	AC_L
White	AC_N
Green	Ground
Brown	1~10V+ or DMX+
Blue	1~10V- or DMX-

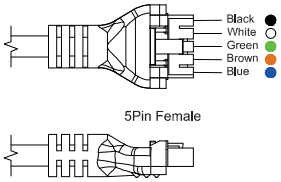

DESCRIPTION
3 pin power wire

PART NUMBER
AL-ID3P-xx”-W/L

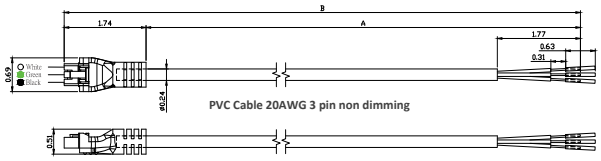

Wire color	Description
Black	AC_L
White	AC_N
Green	Ground

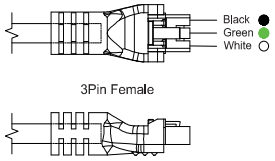

JUMPER CABLE

DESCRIPTION
5 pin power / signal jumper

PART NUMBER
AL-ID5P-xx”-J

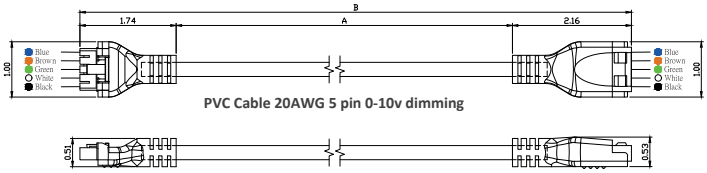

Wire color	Description
Black	AC_L
White	AC_N
Green	Ground
Brown	1~10V+ or DMX+
Blue	1~10V- or DMX-

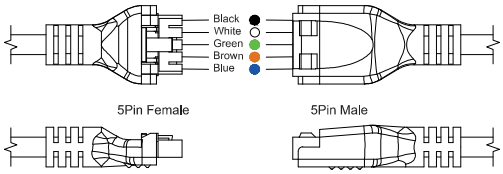

DESCRIPTION
3 pin power jumper

PART NUMBER
AL-ID3P-xx”- J

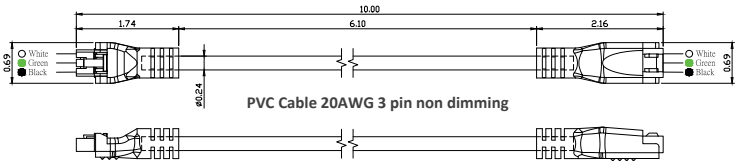

Wire color	Description
Black	AC_L
White	AC_N
Green	Ground

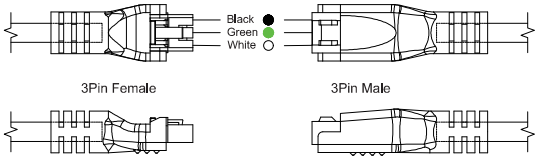

1731 Kaiser Ave. Irvine, CA 92614 | sales@thesmartlightingcompany.com | 949.346.3456 | thesmartlightingcompany.com
© 2021 The Smart Lighting Company. All rights reserved. Specifications subject to change without notice. Rev. 2/23

technology by LEDpower

THE SMART LIGHTING COMPANY

HB30i SERIES

MOUNTING BRACKETS

THE SMART LIGHTING COMPANY

ADJUSTABLE BRACKETS

DESCRIPTION	PART NUMBER
HB30i Adjustable Bracket	AL-ID30 ADJ.Bracket

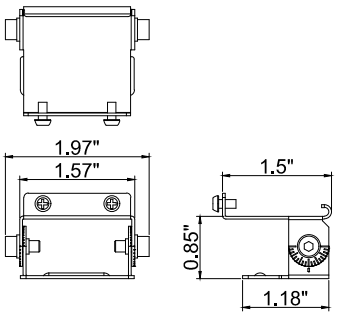

Clip C

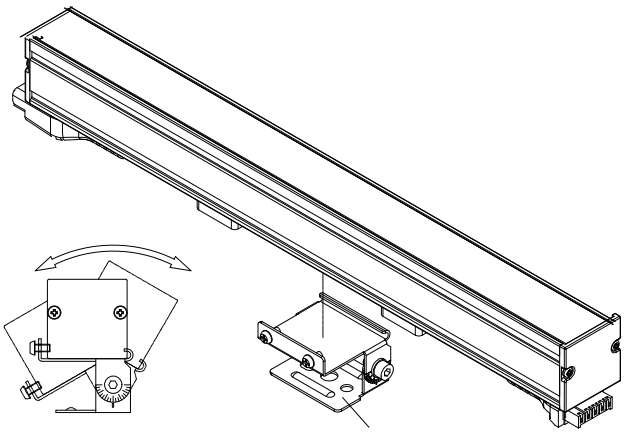

Clip C

FLAT BOTTOM FEED BRACKETS

DESCRIPTION	PART NUMBER
HB30 Flat Bracket - bottom wire feed	AL-ID30-Flat Bracket

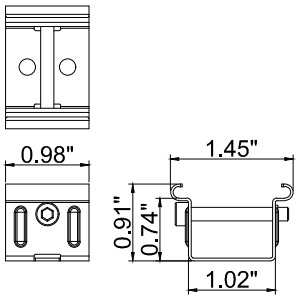

Clip B

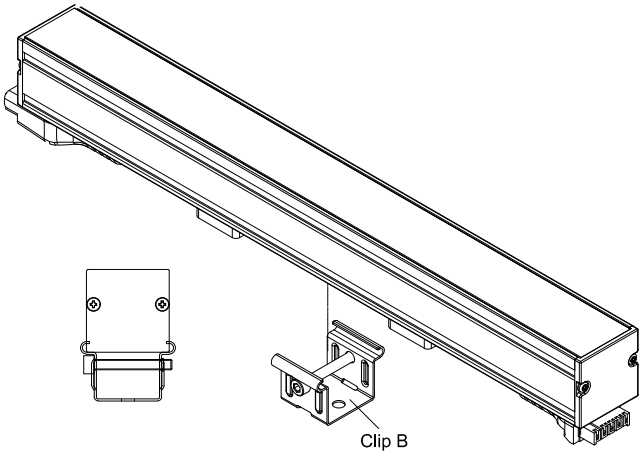

Clip B

FLAT SIDE FEED BRACKETS

DESCRIPTION	PART NUMBER
HB30 Flat Bracket - side wire feed	AL-ID30-FSF Bracket

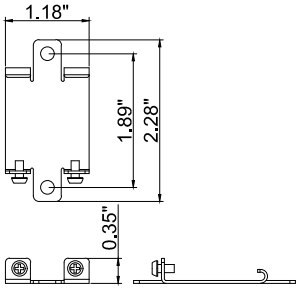

Clip A

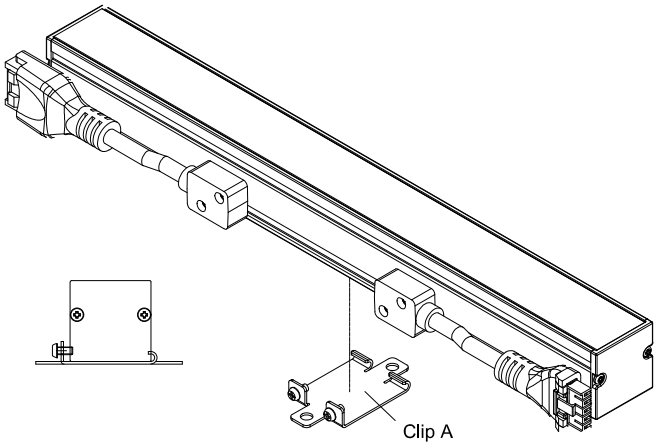

Clip A

1731 Kaiser Ave. Irvine, CA 92614 | sales@thesmartlightingcompany.com | 949.346.3456 | thesmartlightingcompany.com
© 2021 The Smart Lighting Company. All rights reserved. Specifications subject to change without notice. Rev. 2/23

technology by LEDpower

THE SMART LIGHTING COMPANY

SURGE PROTECTION DEVICE

THE SMART LIGHTING COMPANY

SURGE PROTECTION

DESCRIPTION
Surge Protection Device

PART NUMBER
AL-LSP-UNV

The use of a surge protection device is necessary to maintain your warranty. Specifications are subject to change without notice.

SPECIFICATIONS

Input Voltage	120-277V (+/- 5%)		
Frequency	50Hz-60Hz		
Maximum Continuous Voltage	320V		
Maximum Discharge Current	L-N 20kA; L-G, N-G 10kA (8/20Qs standard wave)		
Nominal Discharge Current	5kA		
Measured Limiting Voltage (VpK)	L-N	L-G	N-G
	1200	1320	1320
Max Case Temperature	85°C		

PULSE RATING (8 X 20 SEC)		
Surge Level	# of Strikes	
	L-N	L-G, N-G
10,000A	*2	1
6,500A	4	2
5,000A	30	15
2,000A	200	100
700A	20000	1000

**1 strike at 20,000A*

MECHANICAL DIMENSIONS : IN (MM)

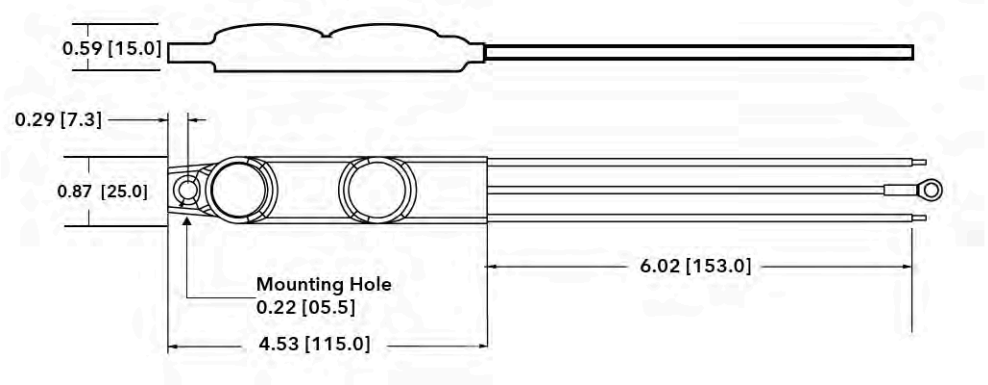

WIRING DIAGRAM

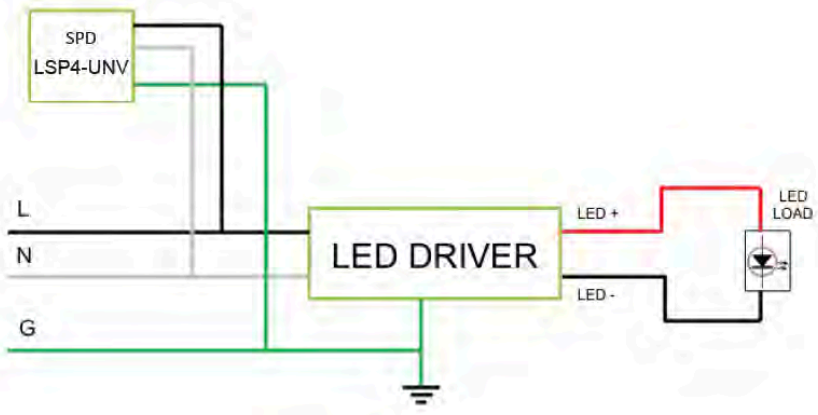

1731 Kaiser Ave. Irvine, CA 92614 | sales@thesmartlightingcompany.com | 949.346.3456 | thesmartlightingcompany.com
© 2021 The Smart Lighting Company. All rights reserved. Specifications subject to change without notice. Rev. 2/23

technology by LEDpower

TSLC THE SMART LIGHTING COMPANY